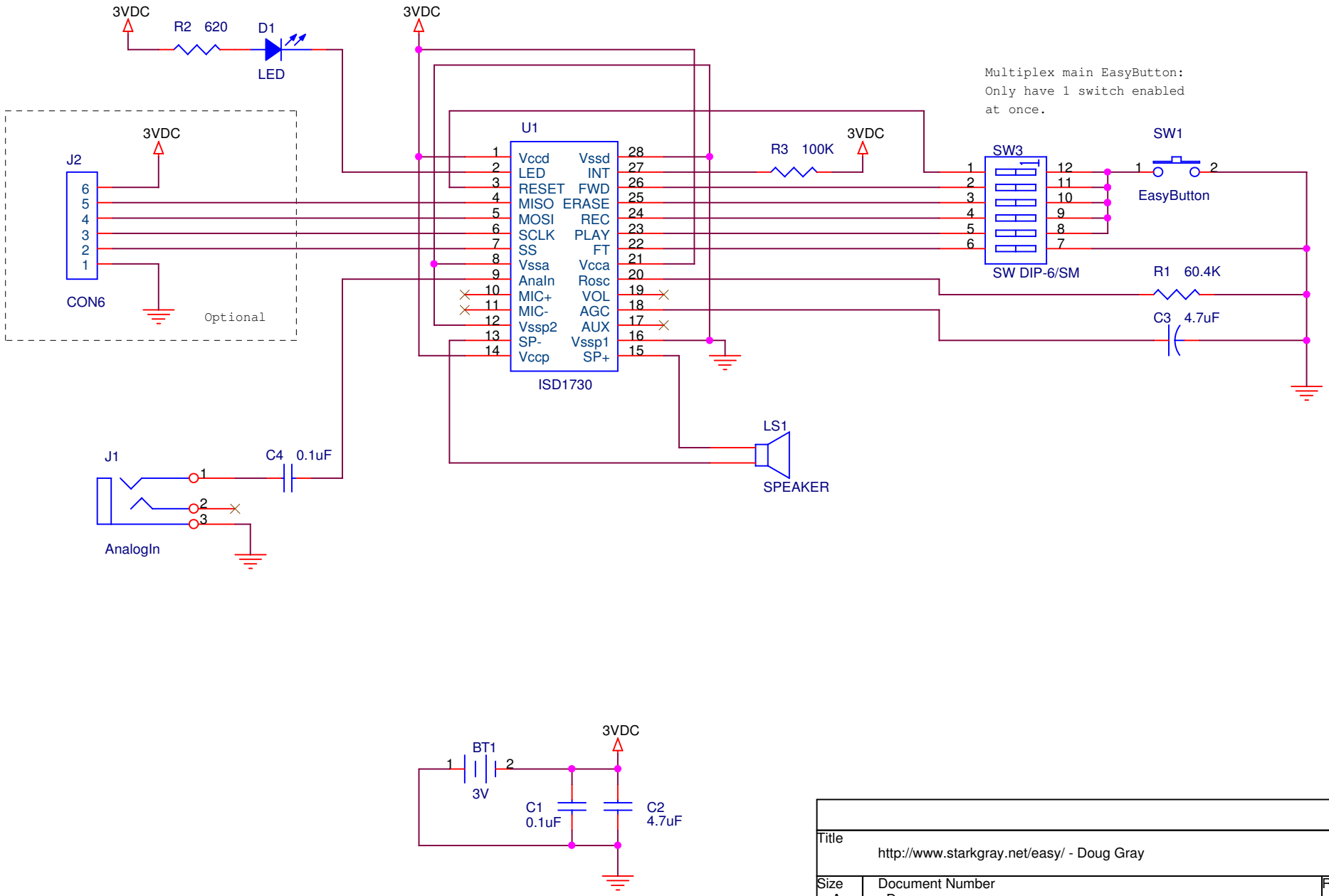

Title	http://www.starkgray.net/easy/ - Doug Gray	
Size A	Document Number <Doc>	Rev B
Date: Tuesday, July 18, 2006	Sheet 1 of 1	